MICRO SWITCH
FREEPORT, ILLINOIS, U.S.A.
A DIVISION OF HONEYWELL
FED. MFG. CODE 91929

SWITCH-ENCLOSED

CATALOG LISTING
5LS1 ★

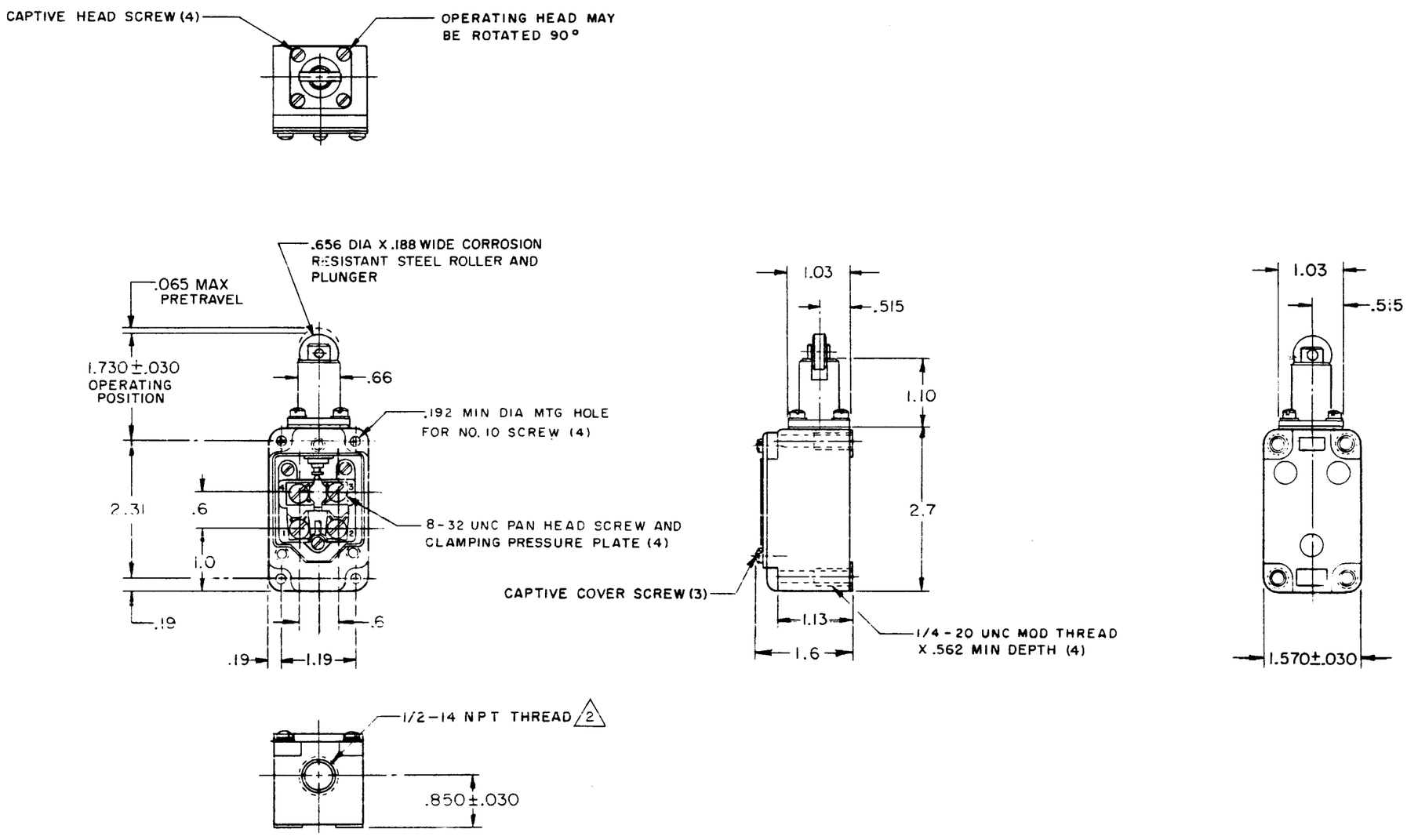

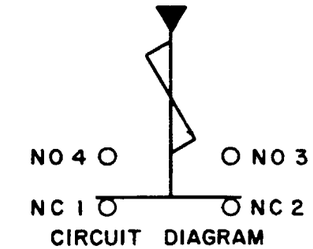

CIRCUIT DIAGRAM

NOTE -

2 SEAL TO BE FURNISHED BY USER
3 - ROLLER ASSEMBLY MAY BE RE-ASSEMBLED 90° FROM POSITION SHOWN

THIS DRAWING COVERS A PROPRIETARY ITEM AND IS THE PROPERTY OF MICRO SWITCH, A DIVISION OF MINNEAPOLIS-HONEYWELL REGULATOR CO. THIS DRAWING IS NOT TO BE COPIED OR USED WITHOUT THE APPROVAL OF MICRO SWITCH.

CHARACTERISTICS	ELECTRICAL DATA	SCALE 1/2 TO 1
OPERATING FORCE — — — — 7 LB MAX (C)	CONTACT ARRANGEMENT (SEE CIRCUIT DIAGRAM)	DO NOT SCALE PRINT
RELEASE FORCE — — — — — — 2 LB MIN	10A-120, 240, OR 480 VAC, 1/3 HP - 120 VAC 3/4 HP - 240 VAC; 0.8A - 115 VDC; 0.4A - 230 VDC .1A - 550 VDC PILOT DUTY: 600 VAC MAX	UNLESS OTHERWISE NOTED DIMENSIONS ARE IN INCHES TOLERANCES ARE:
DIFFERENTIAL TRAVEL — — — — .020 MAX		ONE PLACE (.0) ±.030 TWO PLACE (.00) ±.015 THREE PLACE (.000) ±.005 ANGLES ±
OVERTRAVEL — — — — — — — — .219 MIN		
RELEASE TRAVEL — — — — — — .015 MIN		
SWITCH-BASIC REPLACEMENT — — — — — 2 MN1		WEIGHT

REPLACES
RELEASE NO.
DRAWING NUMBER M 5LS1
ISSUE H
CHECK
REVISIONS
A C015200
RER 7 JUN 65
C023403
MBS 24 SEP 68
C024612
RER 5 OCT 68
C025152
GCH 2 APR 69
C050952
KAG FEB 83
CO 53005-D
CJH AUG 84
CO 65814-E
GRT 20 NOV 90
CHECK
CHECK
DRAWN
RER 18 JUN 65
FO-50378-003